Item	Name	Qty.
1	A.ELA.RA1.5	1
2	CA.08.14.013	1
3	DIM.D10620	1
4	GZA.10.12.1.50	1
5	GZA.10.12.2	2
6	GZA.10.12.3.D	1
7	GZA.10.12.3.MS	1
8	GZA.10.12.3.MS1	1
9	GZA.10.12.5	2
10	M.6x25.SH	1
11	MMD.IL5AP3AVF80	1
12	PSP.1269255	2
13	SP.2x7.5SS	1
14	V.STM3X5	2
15	V.TBCE1,6X6	2

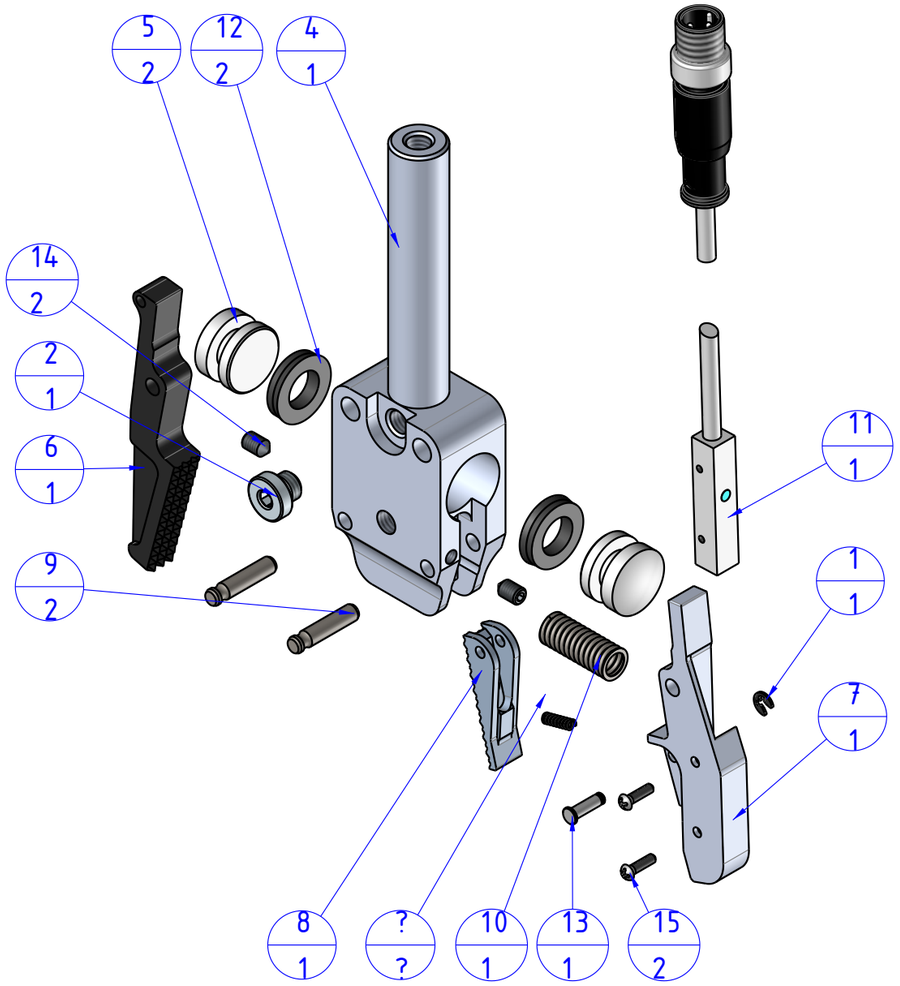

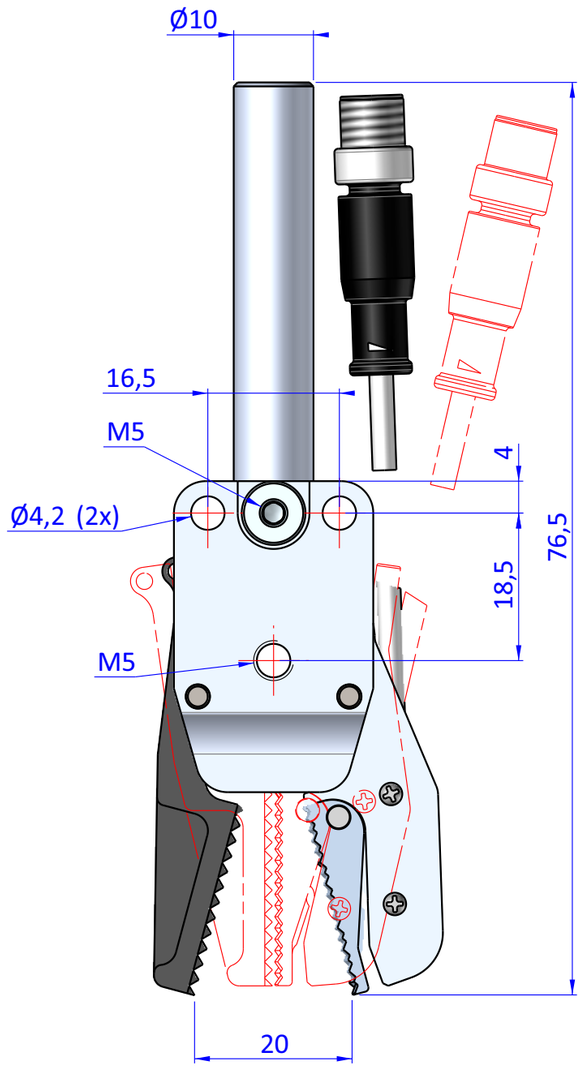

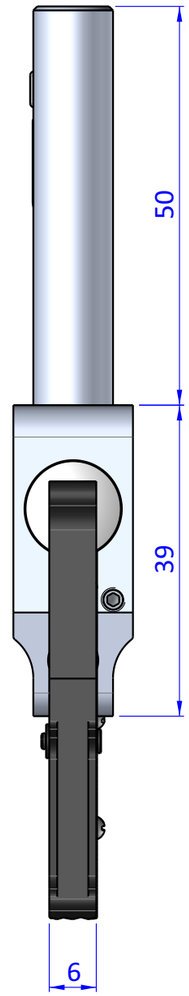

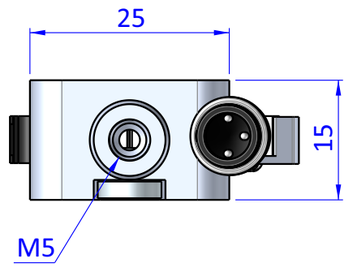

THE PROPERTY OF THE DRAWING IS ESTABILISHED BY LAW. IT IS FORBIDDEN TO PRODUCE OR SHOW IT TO THIRD PART, WITHOUT A WRITTEN AGREEMENT.

Format A3

UNI 936-76

FPSERVICES AUTOMATION

GENERAL TOLERANCE UNI - ISO 2768 CLASSE f	DESCRIPTION CA.GZA.10.12.MS	DESIGNED FROM FPS Automation	REVIEW A
		DATE 21/12/2021	WEIGHT 0,067kg
		CODE CA.GZA.10.12.M5P	